HSF RoHS c UL us CE

SPECIFICATIONS

Rated(额定参数)：300V,10A
Dielectric strength(抗电强度)：AC1250V/1 Minute
Insulation Resistance(绝缘电阻):1000MΩ Min
Contact Resistance(接触电阻):20mΩ Max
Screw Torque(扭矩)：0.2Nm（1.7Lb.in）
Wire Range(线径):18~24AWG
Strip length(剥线长度):5-6mm
Temp. range(操作温度)：-40℃~+105℃
MAX Soldering(瞬时温度):+250°C,5s

Housing Material(塑件)：PA66（UL94 V-0）
Contact(端子)：Brass，Tin plating(黄铜镀锡)
Wire protector(弹片)：Bronze(磷铜)，Ni plating(镀镍)
Screw（螺丝)：M2.0，Steel，Zinc plating(钢,镀锌)

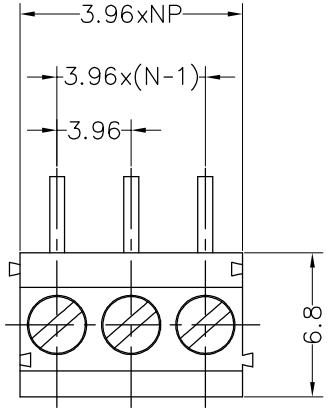

PITCH RANGE IN MM			NOMINAL DIMENSION RANGE IN MM				
TO 6	OVER 6 TO 10	OVER 10 TO 24	TO 30	OVER 30 TO 60	OVER 60 TO 100	OVER 100 TO 150	OVER 150
±0.10	±0.15	±0.25	±0.30	±0.30	±0.50	±0.70	±1.00

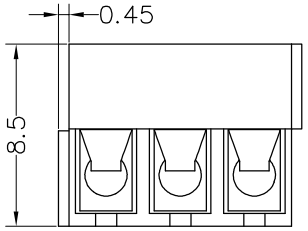

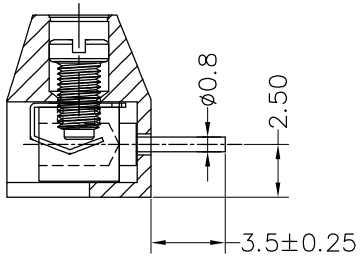

Ordering Information

JL 350R - 396 XX G X 1

- Pitch: 396=3.96PH
- No.of pins: 2P,3P,4P~24P
- Housing Color: B=Black, G=Green, U=Blue, R=Red, W=White, Y=Yellow, O=Orange, E=Grey
- Packing: 0=Pe bag, T=Tube, A=Tray

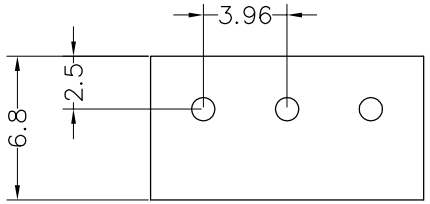

Recommended P.C.B Layout(Top Side)

REV	DATE	MODIFICATION DESCRIPTION	CHANGE
A0	2017.01.04	NEW DRAWING	

OPERATION	
X.X	±0.30
X.XX	±0.20
X.XXX	±0.10
Angle	±3°
DIM	TOL

DRAW	BEN	17.01.04
CHECK		
APPROVE		

SCALE	FIT
UNIT	mm
SIZE	A4
SHEET	1/1
PROJ.	

JiLN® 深圳市锦凌电子有限公司
SHENZHEN JINLING ELECTRONIC CO.,LTD
Tel：86-755-2997-5806/5802 Fax：86-755-2997-5992

PART NO.	JL350R-396XXGX1
TITLE:	3.96mm Terminal Blocks Female 90°